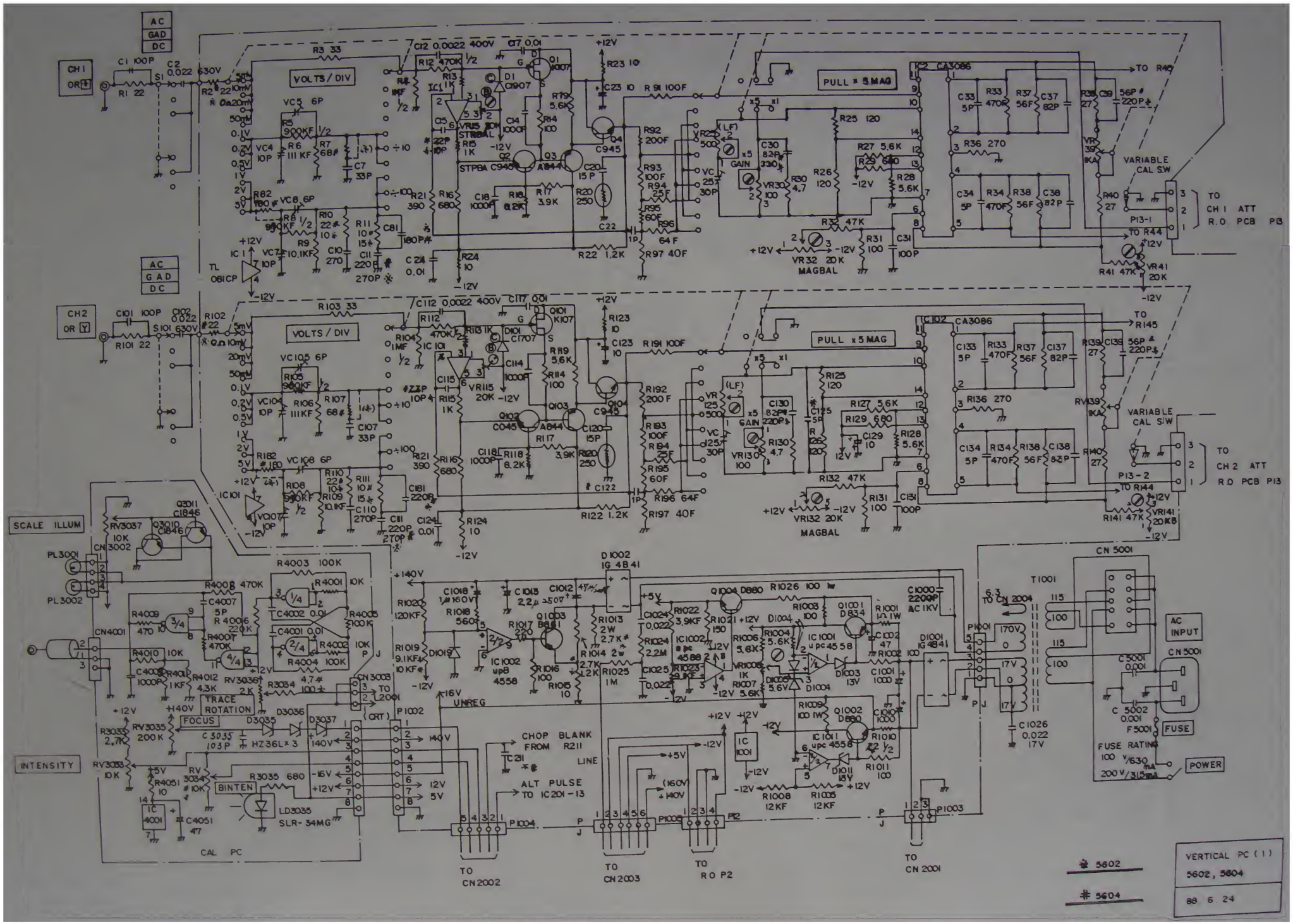
CH1 OR X
CH2 OR Y
AC
GAD
DC
VOLTS / DIV
PULL x 5 MAG
MAGBAL
VARIABLE CAL SW
TO CH1 ATT R.O PCB P13
TO CH2 ATT R.O PCB P13
SCALE ILLUM
INTENSITY
TRACE ROTATION
FOCUS
BINTEN
CHOP BLANK FROM R211
ALT PULSE TO IC201-13
UNREG
AC INPUT
FUSE
FUSE RATING
POWER
TO CN2002
TO CN2003
TO R.O P2
TO CN2001
CAL PC
VERTICAL PC (1)
5602, 5604
88. 6. 24
* 5602
# 5604

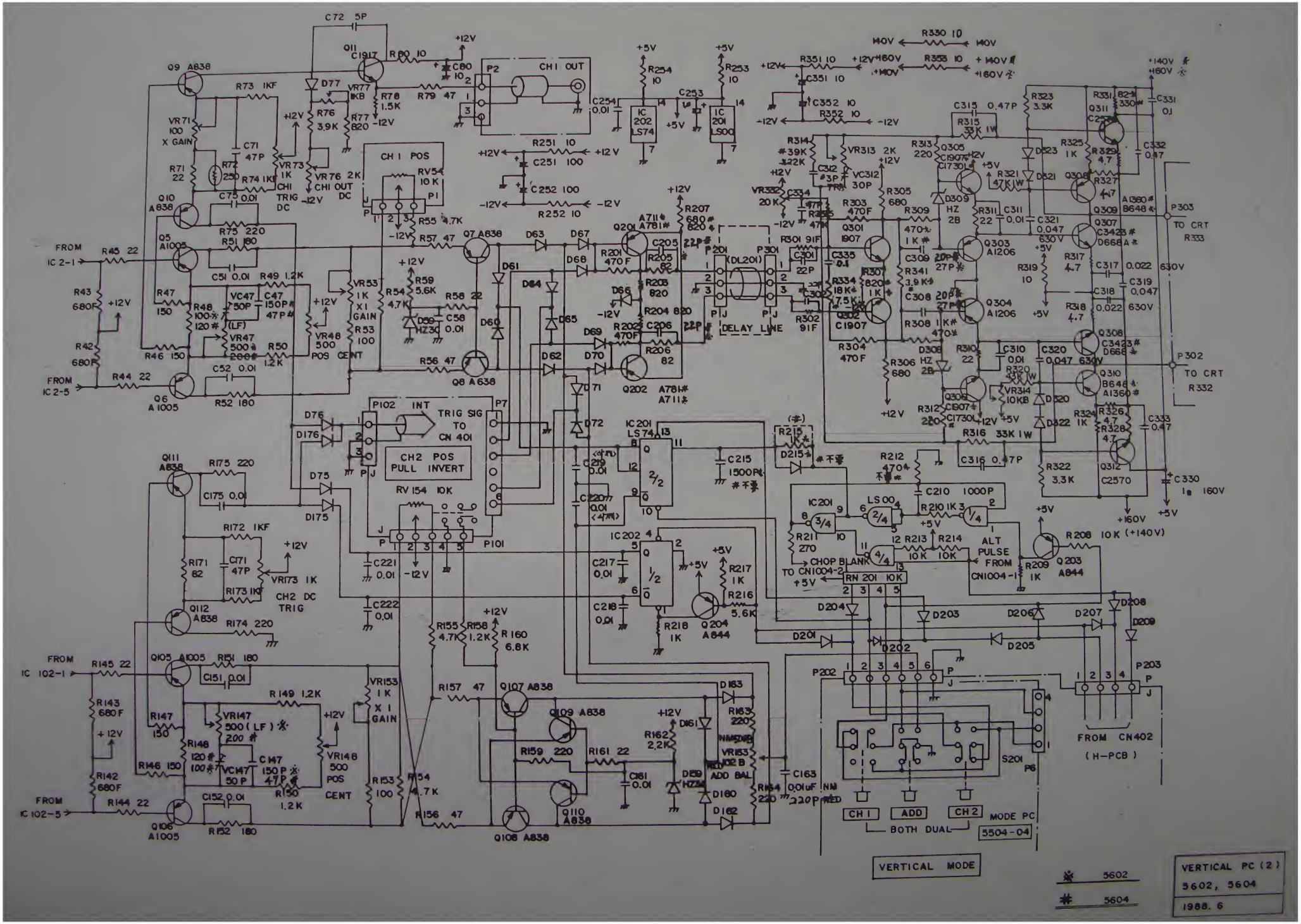
VERTICAL MODE
CH1
ADD
CH2
BOTH DUAL
MODE PC
5504-04
FROM CN402
(H-PCB)
TO CRT R333
TO CRT R332
DELAY LINE
CH1 OUT
CH1 POS
CH2 POS PULL INVERT
TRIG SIG TO CN 401
ALT PULSE FROM CN1004-1
CHOP BLANK TO CN1004-2
CH1 DC TRIG
CH2 DC TRIG
CH1 OUT DC
X GAIN
POS CENT
ADD BAL
VERTICAL PC (2)
5602, 5604
1988. 6
5602
5604

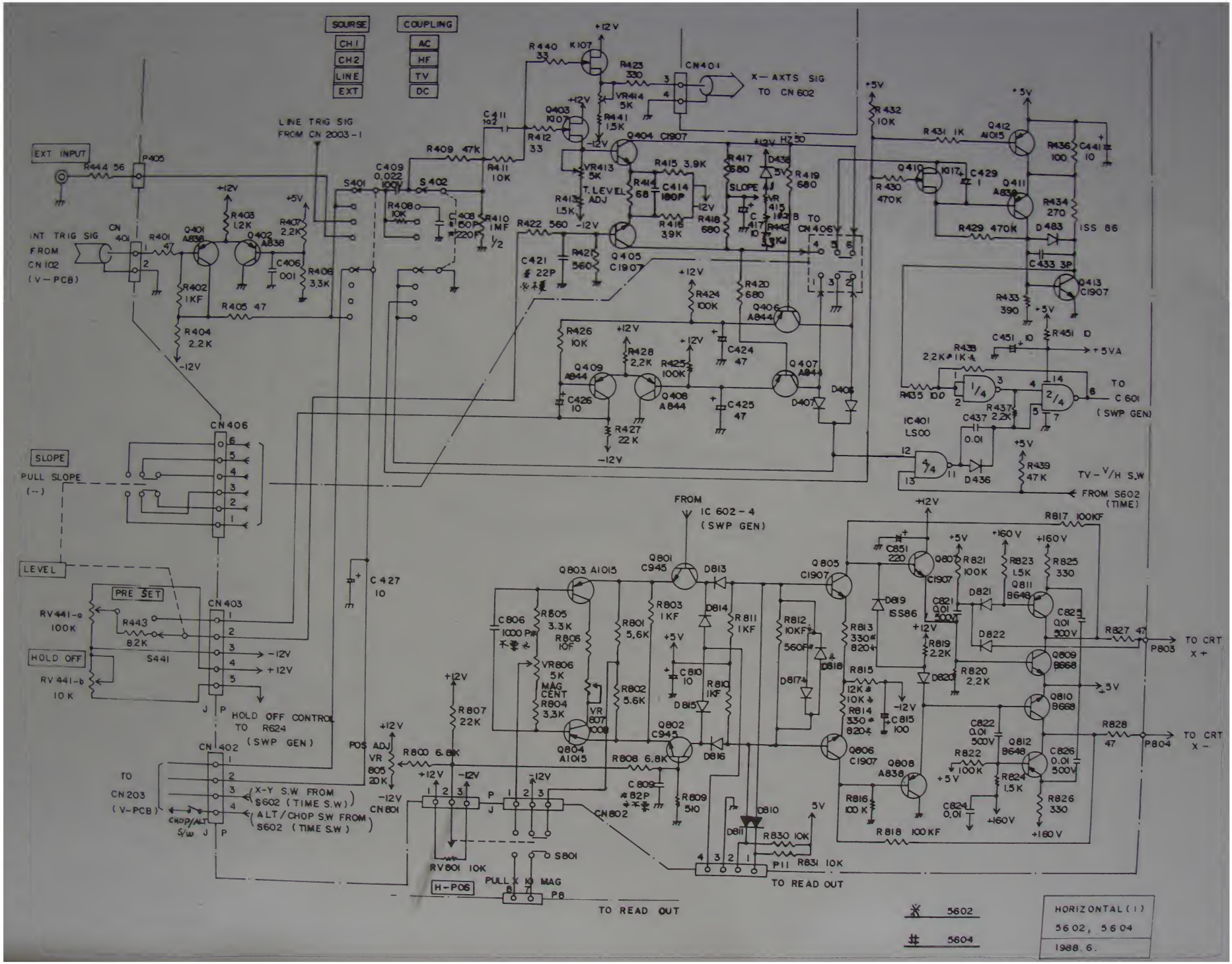
SOURSE
CH1
CH2
LINE
EXT
COUPLING
AC
HF
TV
DC
EXT INPUT
LINE TRIG SIG FROM CN 2003-1
INT TRIG SIG FROM CN 102 (V-PCB)
X-AXTS SIG TO CN 602
T. LEVEL ADJ
SLOPE
TO CN 406
TO C 601 (SWP GEN)
TV-V/H S.W FROM S602 (TIME)
SLOPE
PULL SLOPE (-)
LEVEL
PRE SET
HOLD OFF
HOLD OFF CONTROL TO R624 (SWP GEN)
TO CN 203 (V-PCB)
X-Y S.W FROM S602 (TIME S.W)
ALT/CHOP S.W FROM S602 (TIME S.W)
CHOP/ALT S/W
POS ADJ
FROM IC 602-4 (SWP GEN)
TO CRT X+
TO CRT X-
H-POS
PULL X 10 MAG
TO READ OUT
TO READ OUT
5602
5604
HORIZONTAL (1)
5602, 5604
1988. 6.

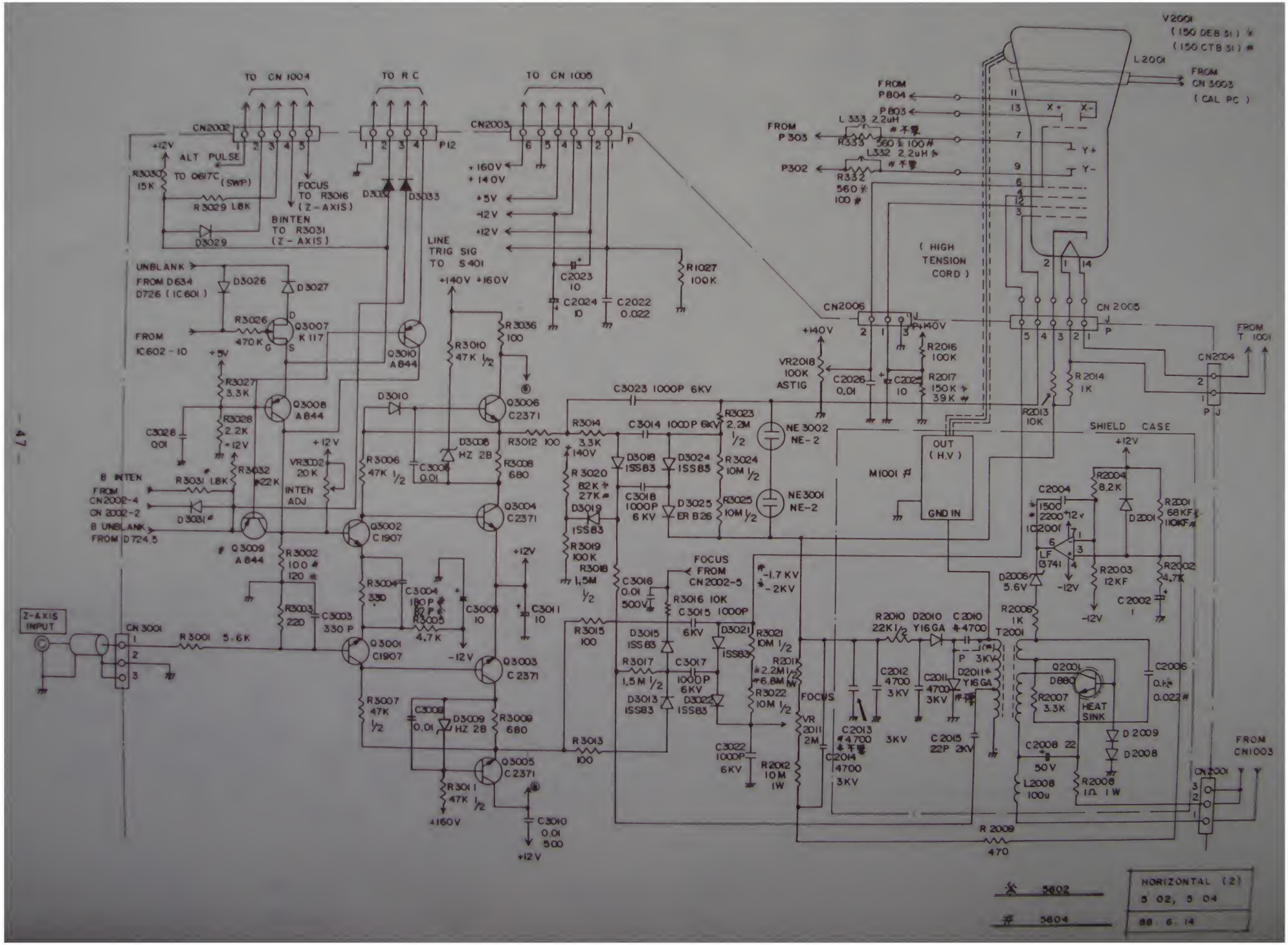

TO CN 1004
TO R C
TO CN 1005
CN2002
CN2003
P12
ALT PULSE
TO Q617C (SWP)
FOCUS TO R3016 (Z-AXIS)
BINTEN TO R3031 (Z-AXIS)
LINE TRIG SIG TO S401
UNBLANK FROM D634 D726 (IC601)
FROM IC602-10
B INTEN FROM CN2002-4 CN 2002-2
B UNBLANK FROM D724.5
INTEN ADJ
Z-AXIS INPUT
CN 3001
FROM P804
P803
FROM P303
P302
L333 2.2uH
L332 2.2uH
V2001 (150 DEB 31) (150 CTB 31)
L2001
FROM CN 3003 (CAL PC)
(HIGH TENSION CORD)
CN2006
CN 2005
CN2004
FROM T 1001
VR2018 100K ASTIG
SHIELD CASE
OUT (H.V)
GND IN
M1001
NE 3002 NE-2
NE3001 NE-2
FOCUS FROM CN2002-5
FOCUS
HEAT SINK
FROM CN1003
CN2001
5602
5604
HORIZONTAL (2)
5 02, 5 04
88. 6. 14

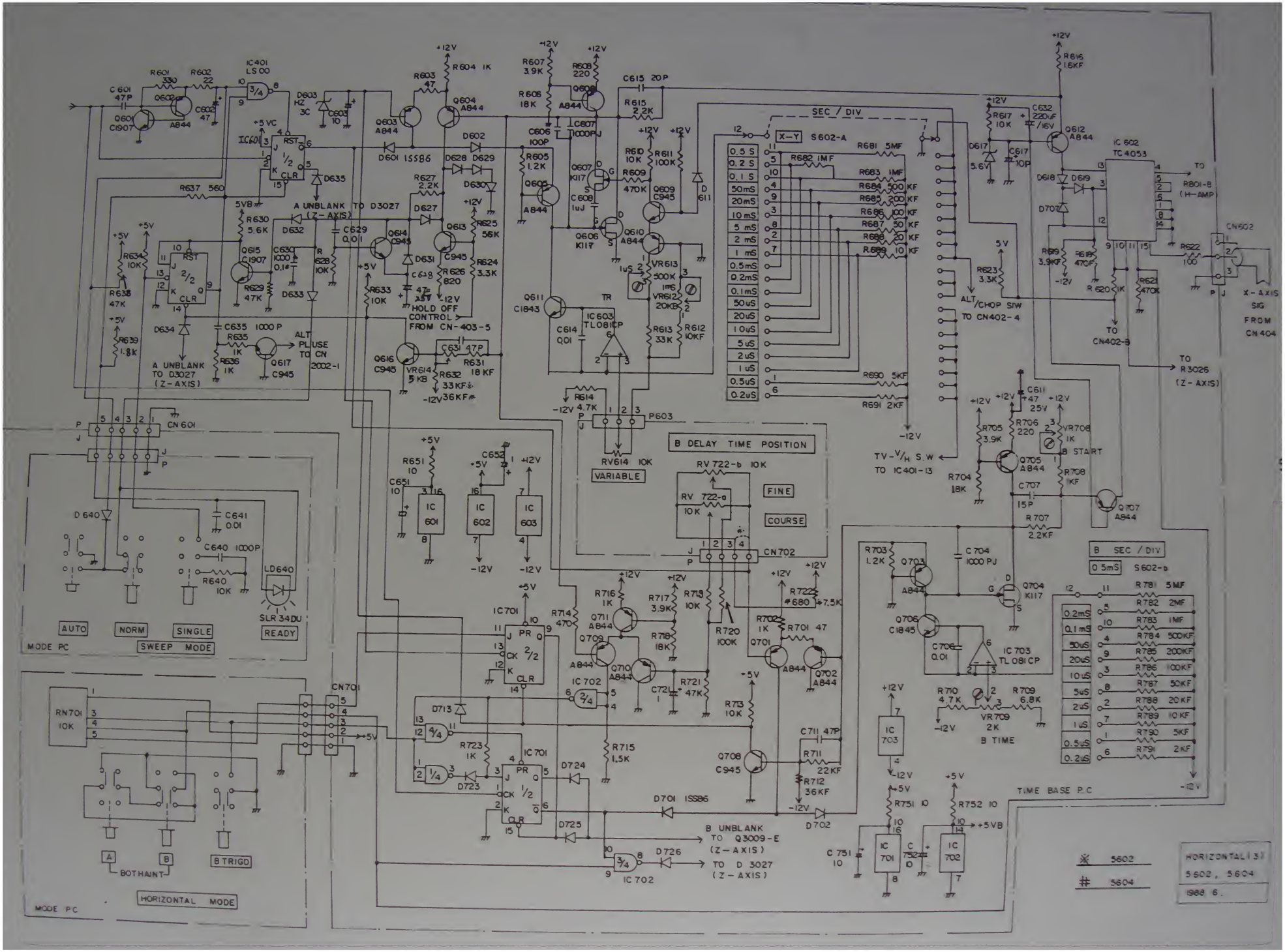

SEC / DIV
X-Y S602-A
B DELAY TIME POSITION
FINE
COURSE
VARIABLE
B SEC / DIV
0.5mS S602-b
B TIME
TIME BASE P.C
MODE PC
AUTO
NORM
SINGLE
SWEEP MODE
READY
HORIZONTAL MODE
BOTHAINT
B TRIGD
A UNBLANK TO D3027 (Z-AXIS)
HOLD OFF CONTROL FROM CN-403-5
ALT PLUSE TO CN 2002-1
ALT/CHOP SIW TO CN402-4
TV-V/H S.W TO IC401-13
TO R801-B (H-AMP)
TO CN402-B
TO R3026 (Z-AXIS)
X-AXIS SIG FROM CN404
B UNBLANK TO Q3009-E (Z-AXIS)
TO D 3027 (Z-AXIS)
HORIZONTAL (3)
5602, 5604
1988 6.

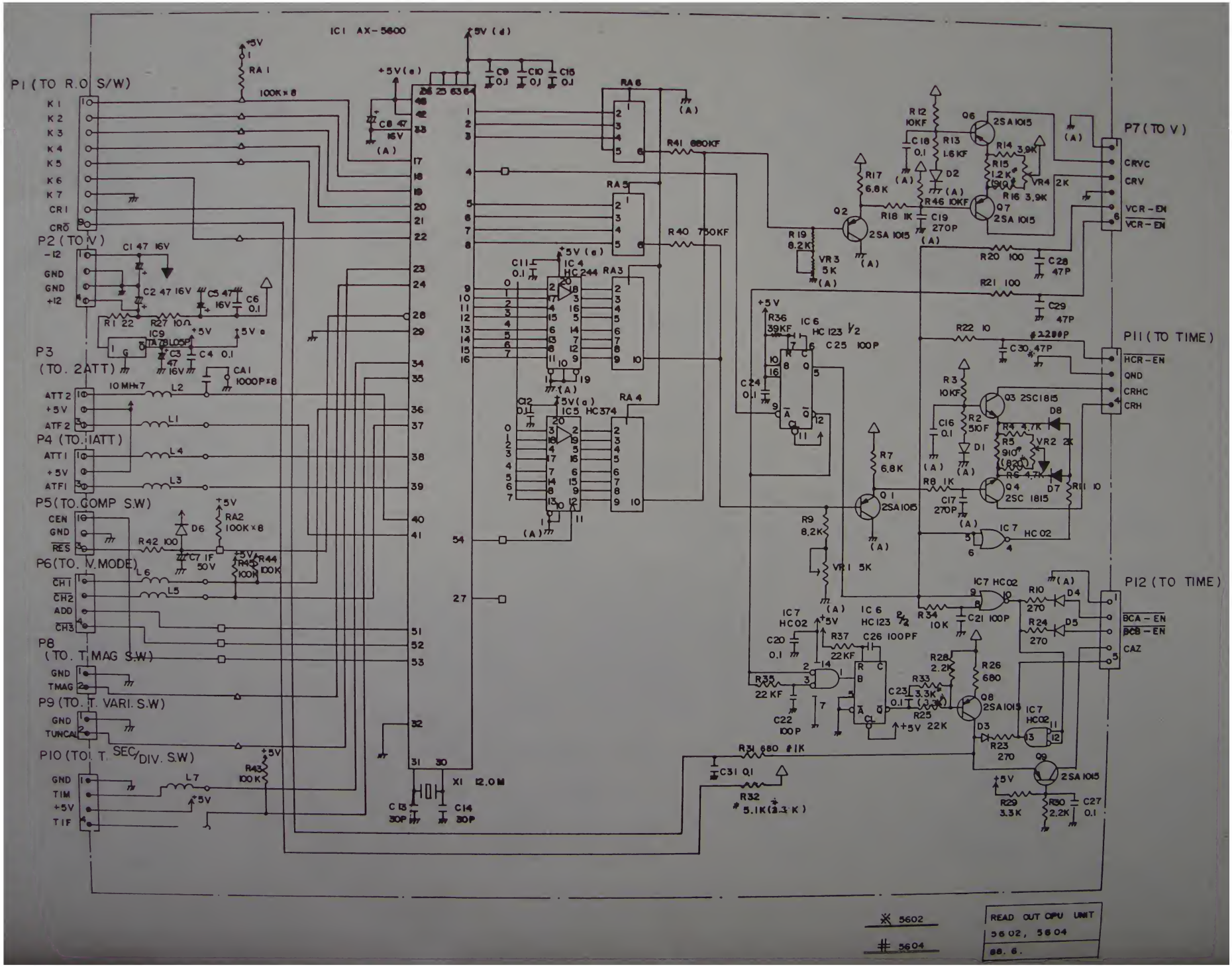
IC1 AX-5600
P1 (TO R.O S/W)
K1
K2
K3
K4
K5
K6
K7
CR1
CRO
P2 (TO V)
-12
GND
GND
+12
P3 (TO. 2ATT)
ATT2
+5V
ATF2
P4 (TO. 1ATT)
ATT1
+5V
ATF1
P5 (TO. COMP S.W)
CEN
GND
RES
P6 (TO. V. MODE)
CH1
CH2
ADD
CH3
P8 (TO. T. MAG S.W)
GND
TMAG
P9 (TO. T. VARI. S.W)
GND
TUNCAL
P10 (TO. T. SEC/DIV. S.W)
GND
TIM
+5V
TIF
P7 (TO V)
CRVC
CRV
VCR-EN
VCR-EN
P11 (TO TIME)
HCR-EN
GND
CRHC
CRH
P12 (TO TIME)
BCA-EN
BCB-EN
CAZ
X1 12.0M
IC4 HC244
IC5 HC374
IC6 HC123
IC7 HC02
IC9 TA78L05P
Q1 2SA1015
Q2 2SA1015
Q3 2SC1815
Q4 2SC1815
Q6 2SA1015
Q7 2SA1015
Q8 2SA1015
Q9 2SA1015
※ 5602
5604
READ OUT CPU UNIT
5602, 5604
88. 6.